GTOmega
CERTIFIED SIM RACING

ALUMINIUM PROFILE RACING COCKPIT

PRIME Cockpit

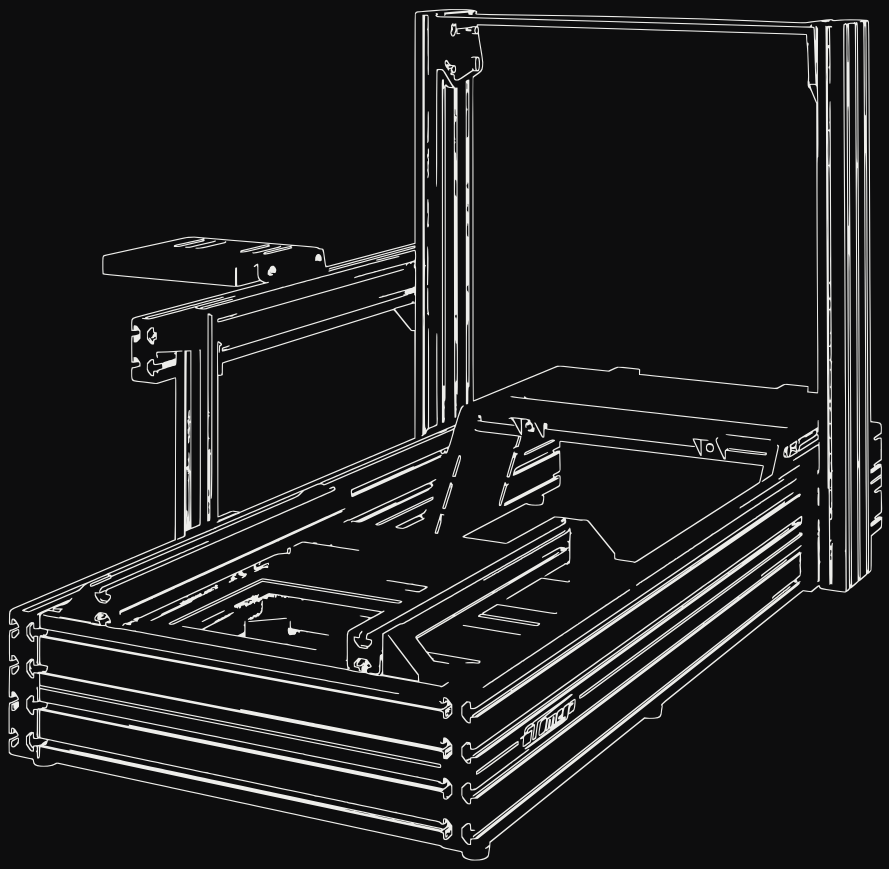

BUILD TIME	READ TIME	RECOMMENDED	STEPS
3-4 hrs	10 min	2 people	14

Contents

01	Safety notices	Read before assembly	03
02	What's in the box	Parts and hardware	04
03	T-nut guide	Thicker and thinner T-nuts	05
04	Bolt measurement card	Check bolt size and length	06
05	Base frame	Steps 01 to 02	07
06	Seat mount	Steps 03 to 05, one option only	08
07	Uprights	Steps 06 to 07	11
08	Gear shifter mount	Steps 08 to 10	12
09	Finishing	Steps 11 to 12	14
10	Pedal tray	Steps 13 to 14	15
11	Wheel deck	Fit the deck you ordered	18

NEED HELP?

We're here for you. Contact our support team.

gtomega.co.uk/help →

READ BEFORE ASSEMBLY

Safety notices



Children should not use unsupervised



Do not stand on the PRIME Cockpit



Take care when assembling

> Failure to comply with or observe all assembly, safety and operation instructions regarding the use of this product may result in **property damage** or **bodily injury**.

01 This document contains important safety regulations. Any non-conforming use may result in personal injury or mechanical damage.

02 Please read this user manual carefully before use as it provides key information about safety, use, and assembly of the **PRIME Cockpit**.

03 Ensure that you have received all parts according to the part checklist prior to installation. If any parts are missing or faulty, contact the GT Omega support team for replacements.

04 **Do not** overtighten the screws during installation.

05 This product contains small items that could be a choking hazard if swallowed. Keep these items away from children.

06 This product is designed for indoor use only. Using the product outdoors could lead to product failure and personal injury.

07 Alteration or modification of any factory components outlined in the checklist will automatically void your warranty.

08 Place the **PRIME Cockpit** away from corrosive gas, water and dusty environments.

The **PRIME Cockpit** is designed for indoor use and dry work areas only. Under no circumstances does the manufacturer accept warranty claims or liability claims for damages caused from improper use or handling.

PARTS AND HARDWARE

What's in the box

Check that all parts are included. If any parts are missing, contact our Customer Support team before starting assembly.

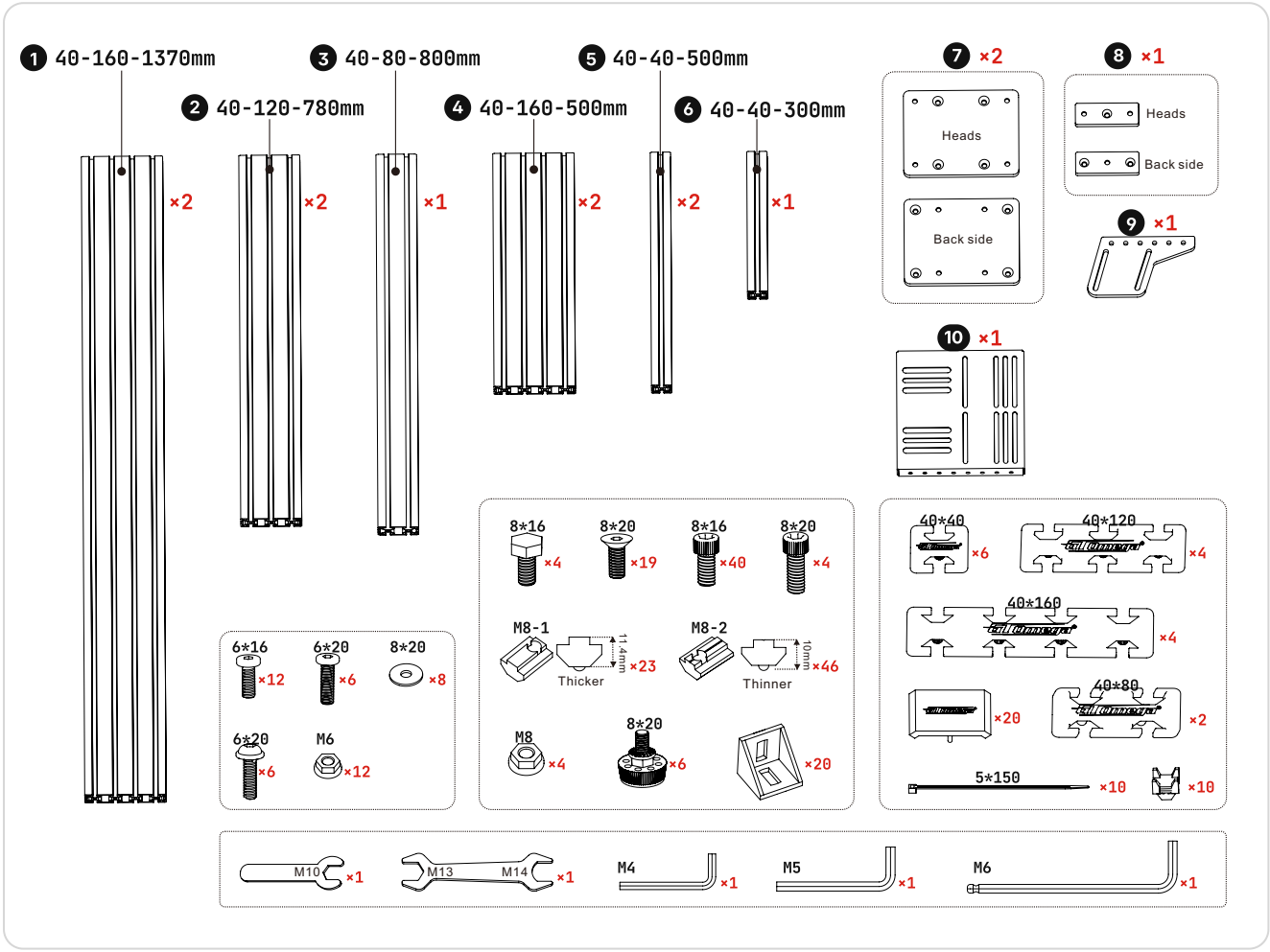

40-160-1370

Profiles. 40 × 160 mm, 1370 mm long. Several profiles share a size, so check the length too.

8*16

Screws. M8 thread, 16 mm long. Similar screws look alike, so match the code before use.

Pedal tray and wheel deck. These come in their own boxes with their own hardware. Fit them after the main frame, from page 15 and page 18.

BEFORE YOU START

T-nut guide

This kit uses two sizes of M8 T-nut. Each step shows which one to use, so check before you slide one in.

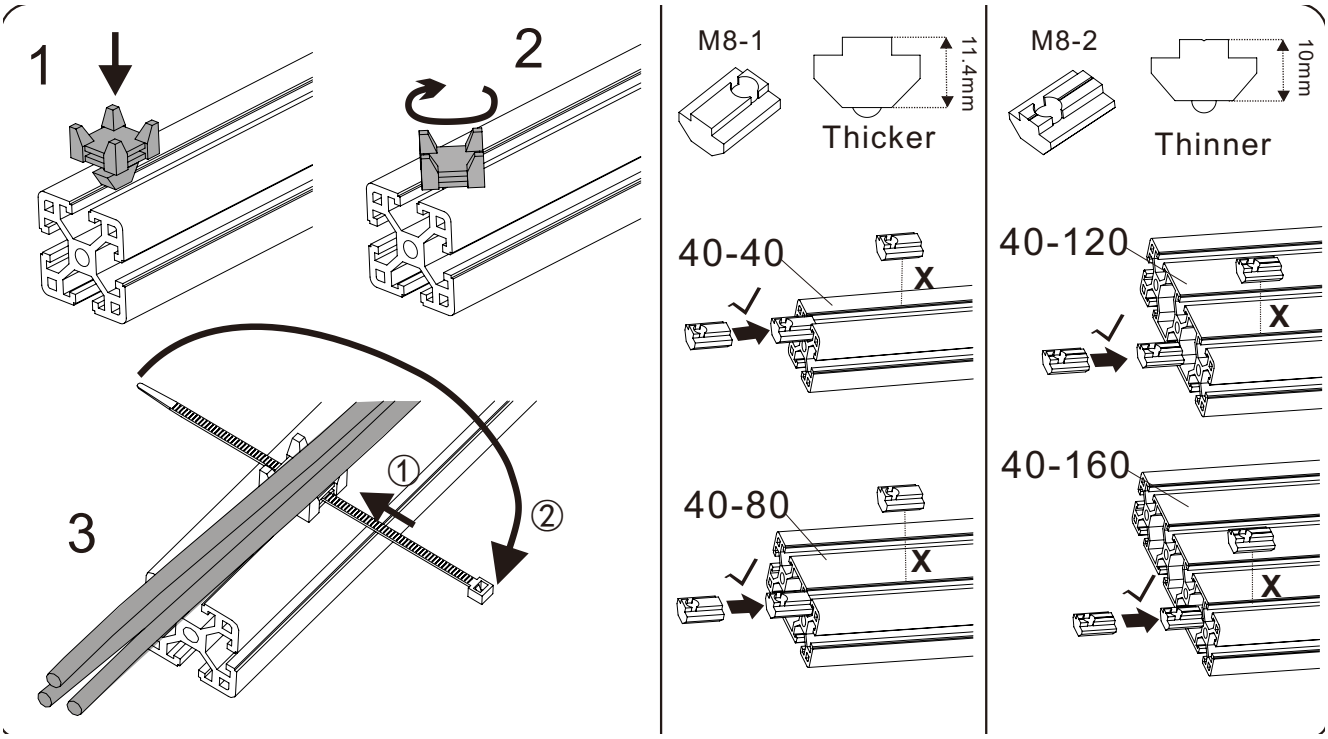

`M8-1` **Thicker, 11.4 mm.** Fits the 40-40 and 40-80 profiles.

`M8-2` **Thinner, 10 mm.** Fits the 40-120 and 40-160 profiles.

> **TIP**
> Drop the T-nut into the channel and turn it a quarter turn to lock it in place, as shown in the top left of the guide.

BEFORE YOU START

Bolt measurement card

Use the card in the box to check any bolt. It tells you the thread size and the length.

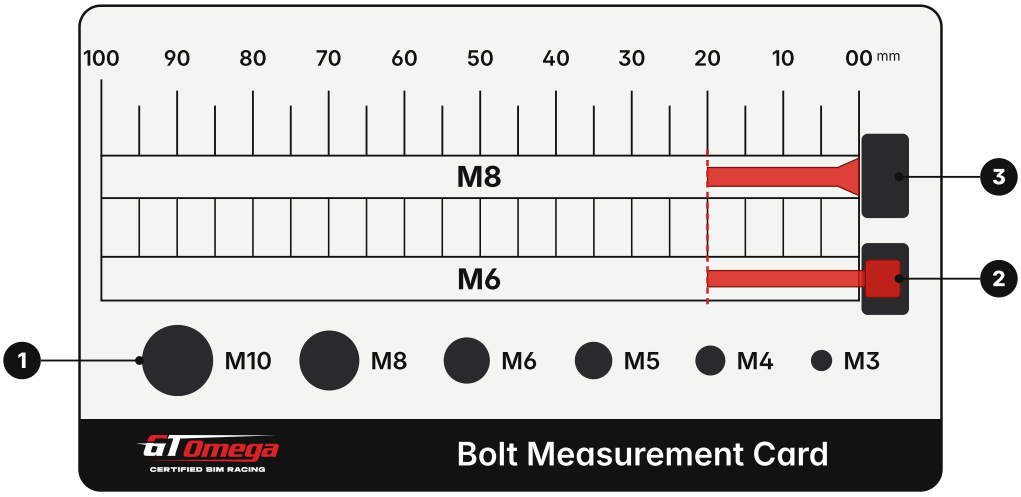

Pop out the holes first. Press each hole on the card through with your thumb before you use it.

1. **Check the thread size**
   Push the bolt through the holes. It sits snug in the hole that matches its size, from M3 to M10.

2. **Measure a regular bolt**
   Sit the head in the recess at the end of the strip for its size. Read the length where the tip ends.

3. **Measure a countersunk bolt**
   Line the top of the head up with the 00 line. Countersunk heads sit flush with the cockpit, so they are measured from the top.

EXAMPLE

Both bolts drawn in red read 20 mm. The top one is an 8*20 countersunk bolt and the bottom one is a 6*20 regular bolt.

SECTION 01

Base frame

01

Steps 01 to 02

STEP 01

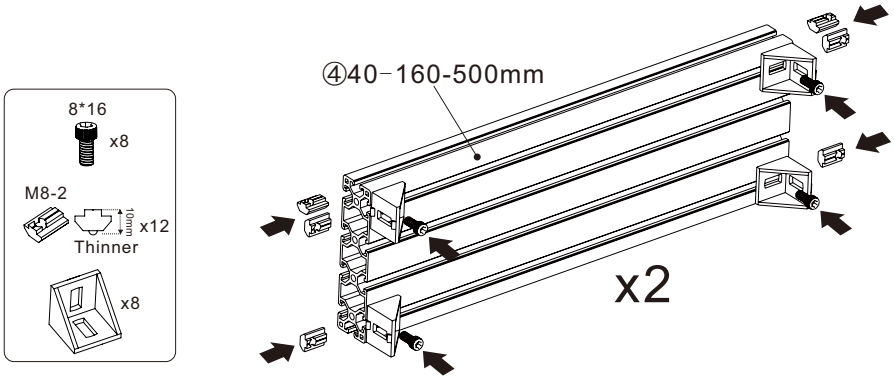

STEP 02

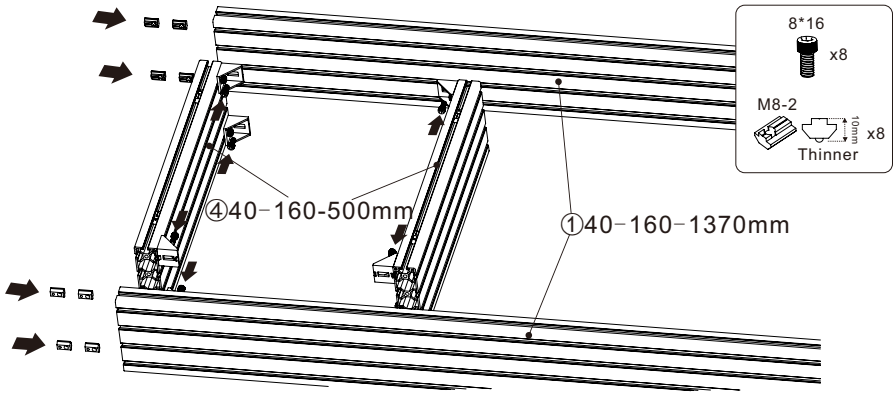

TIP

Leave each joint slightly loose until the base frame is square, then go back and fully tighten every screw.

Do not overtighten screws. This may damage components.

SECTION 02

Seat mount

02

Steps 03 to 05, one option only

1 OPTION 1

Seat bolted into the bars

Brackets sit on top. The seat bolts into the cross bar channels with T-nuts.

Go to page 09 →

2 OPTION 2

Seat bolted to brackets

Brackets sit under the bars. The seat bolts through them with M8 nuts.

Go to page 10 →

Choose one option. It comes down to preference. Option 2 gives more clearance for bolting upward and can be easier with seat sliders. Follow only your option, then carry on from step 06 on page 11.

TIP

Racing seat sold separately. The PRIME Cockpit is designed to fit GT Omega racing seats, and many third-party seats will mount too.

! Do not overtighten screws. This may damage components.

Option 1: Seat bolted into the bars. Follow steps 03 to 05 here only. Option 2 is on page 10.

STEP 03

OPTION 1

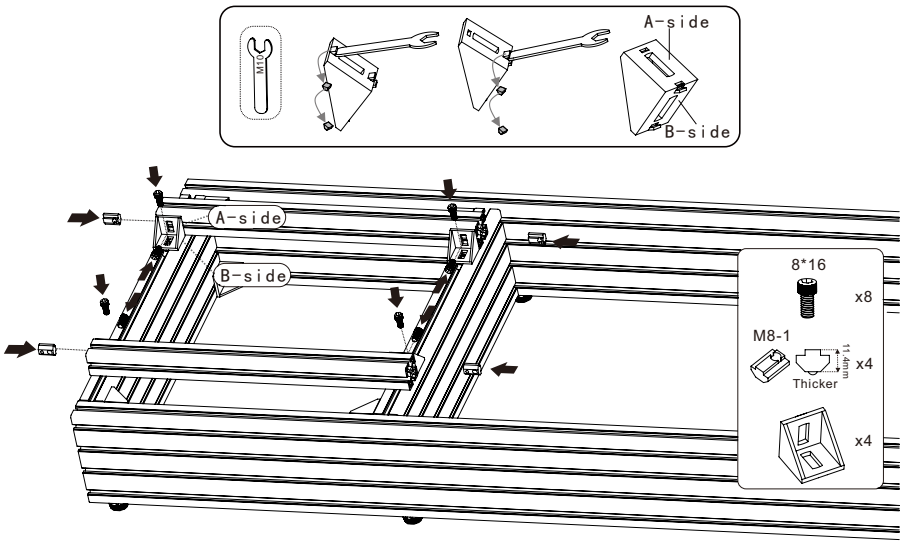

STEPS 04 and 05

OPTION 1

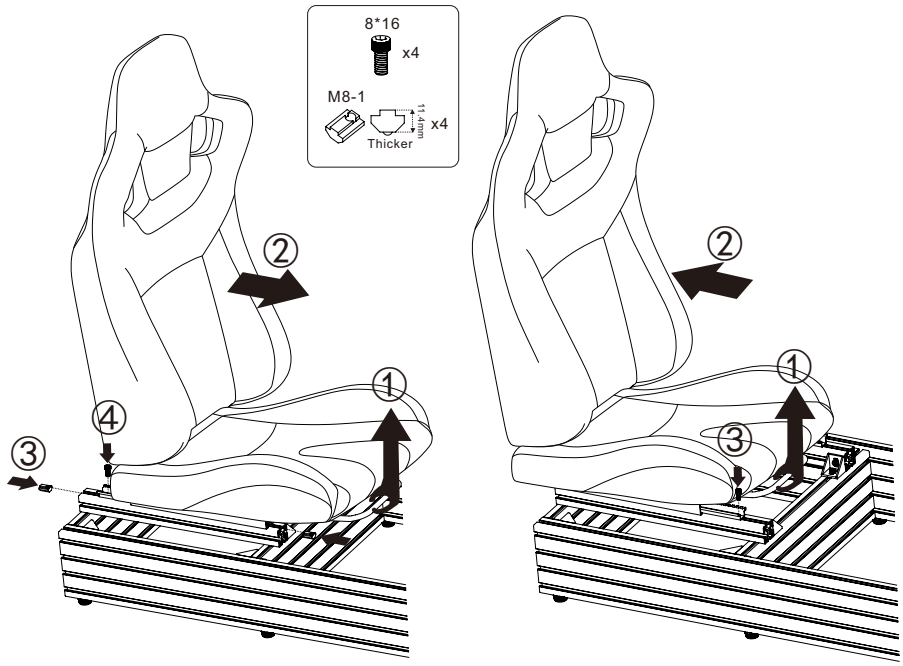

Do not overtighten screws. This may damage components.

2 **Option 2: Seat bolted to brackets.** Follow steps 03 to 05 here only. Option 1 is on page 09.

STEP 03

OPTION 2

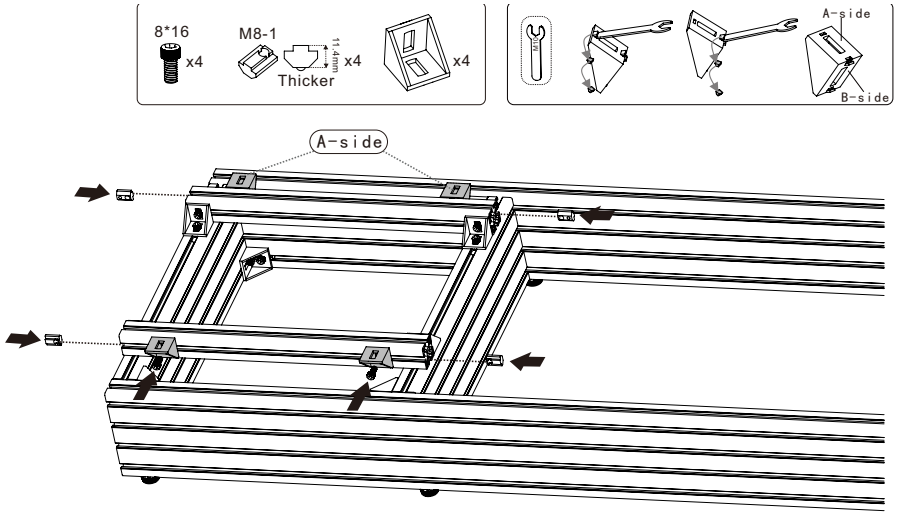

STEPS 04 and 05

OPTION 2

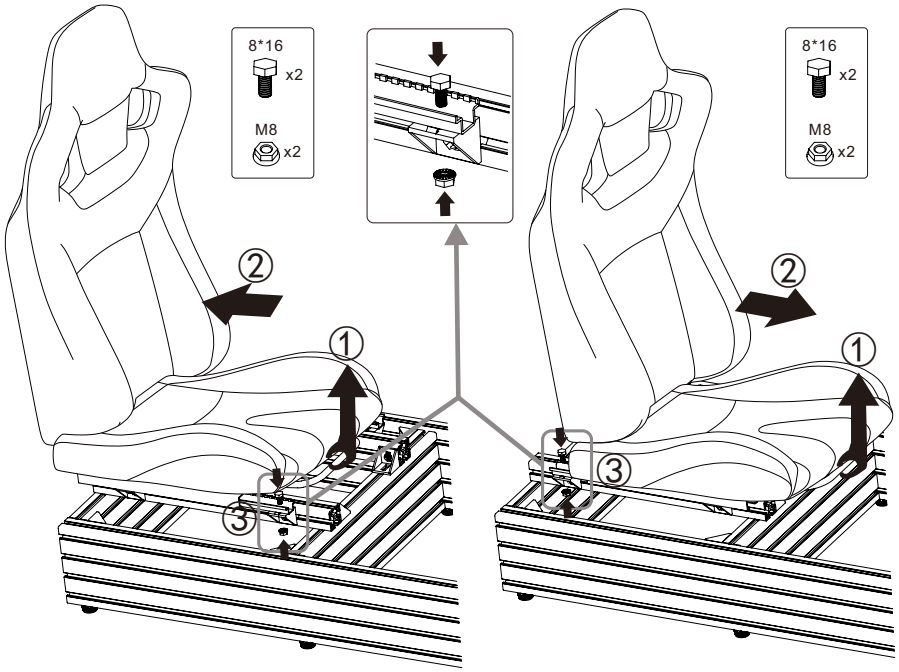

Do not overtighten screws. This may damage components.

SECTION 03

Uprights

03

Steps 06 to 07

STEP 06

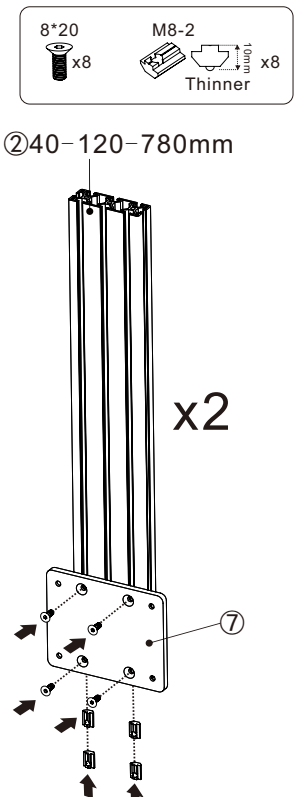

STEP 07

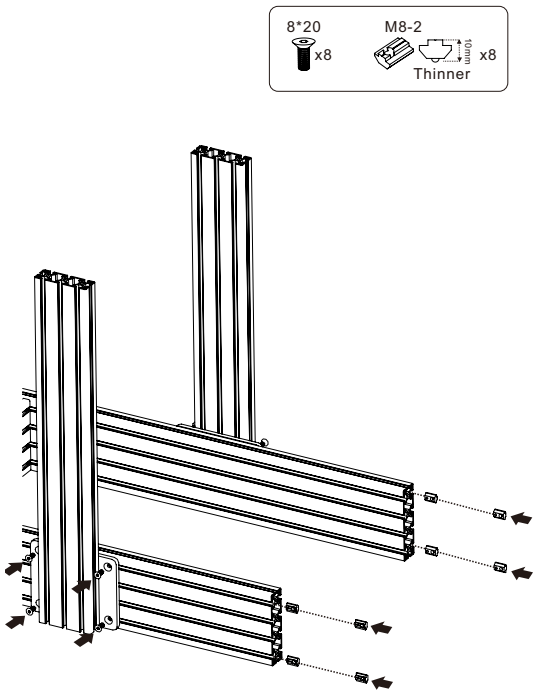

Do not overtighten screws. This may damage components.

SECTION 04

Gear shifter mount

04

Steps 08 to 10

STEP 08

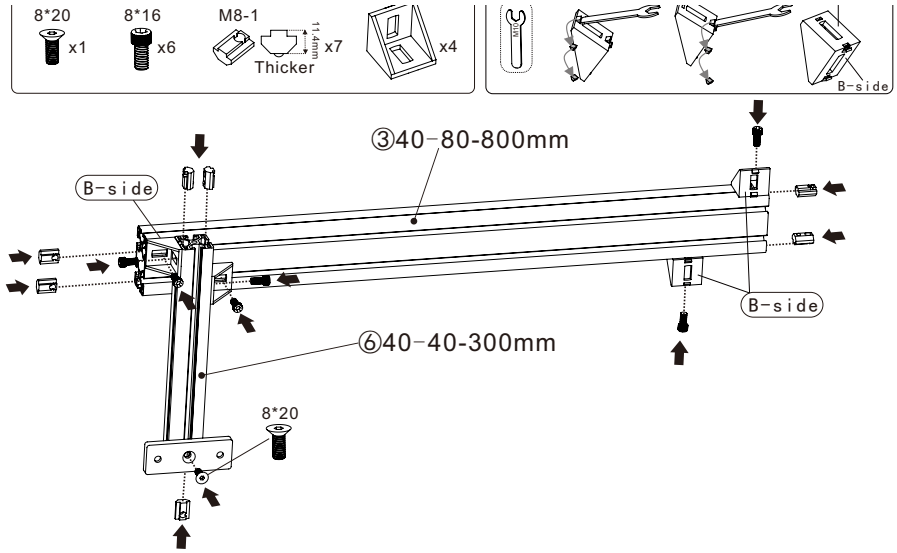

STEP 09

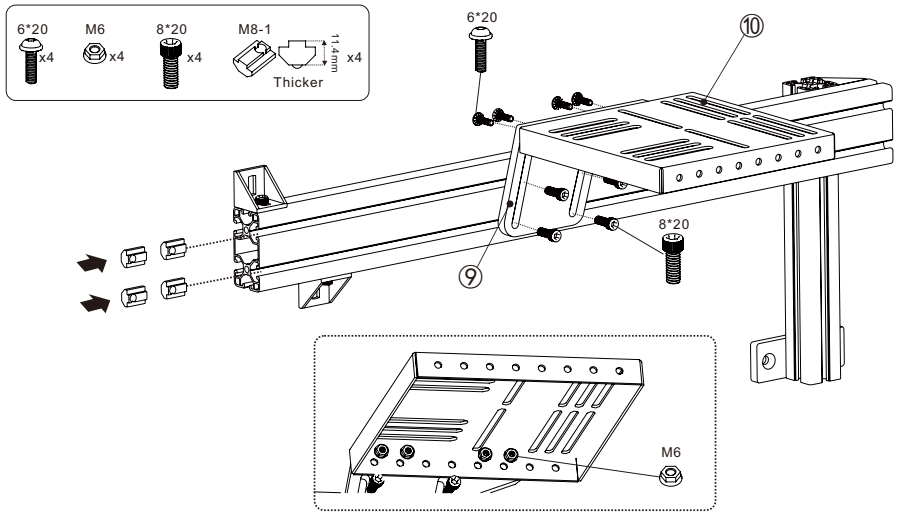

Do not overtighten screws. This may damage components.

STEP 10

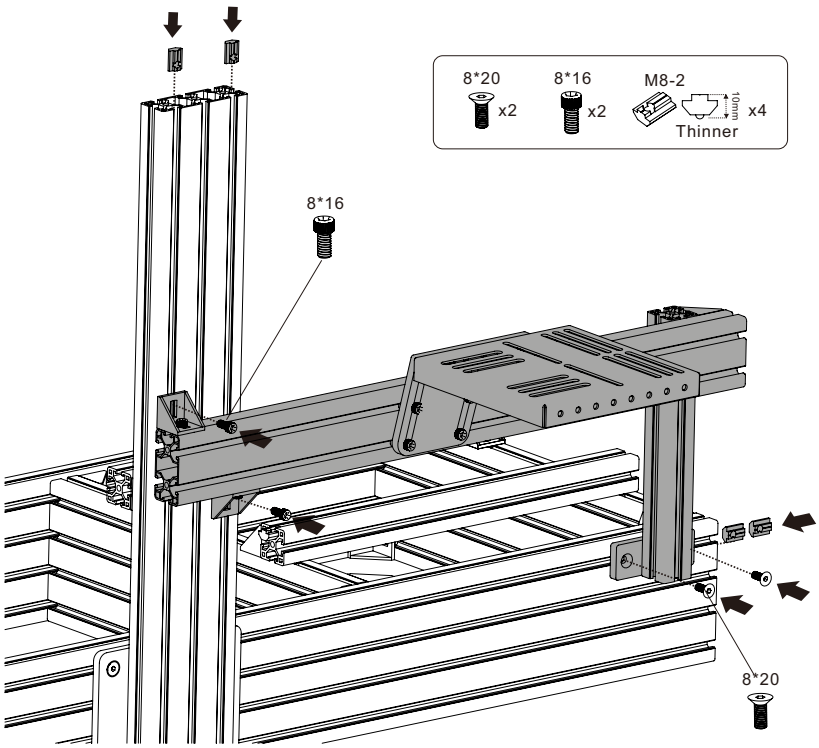

TECHNICAL NOTE

The gear shifter mount can be moved along the frame and adjusted for height. Loosen the screws, slide it into position and retighten.

Do not overtighten screws. This may damage components.

SECTION 05

Finishing

05

Steps 11 to 12

STEP 11

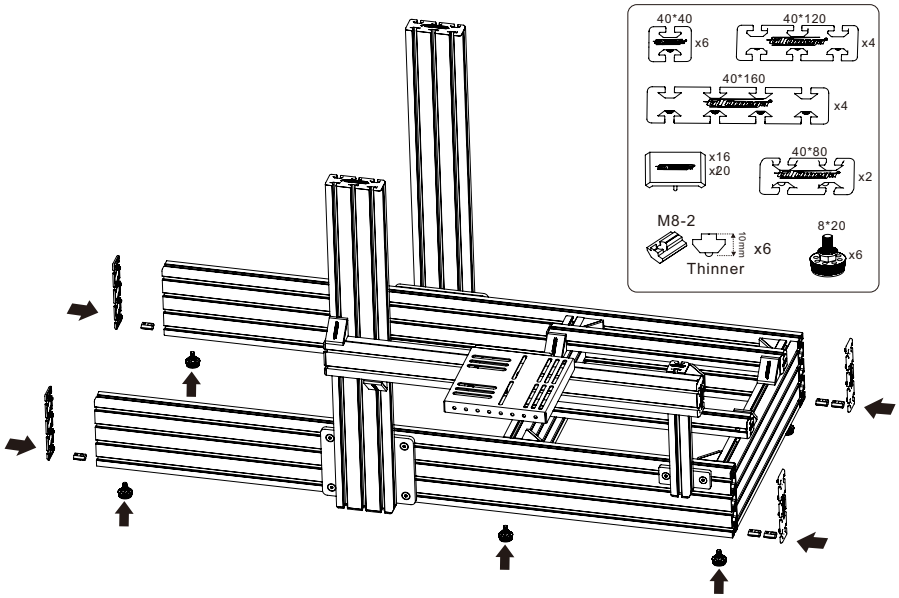

STEP 12

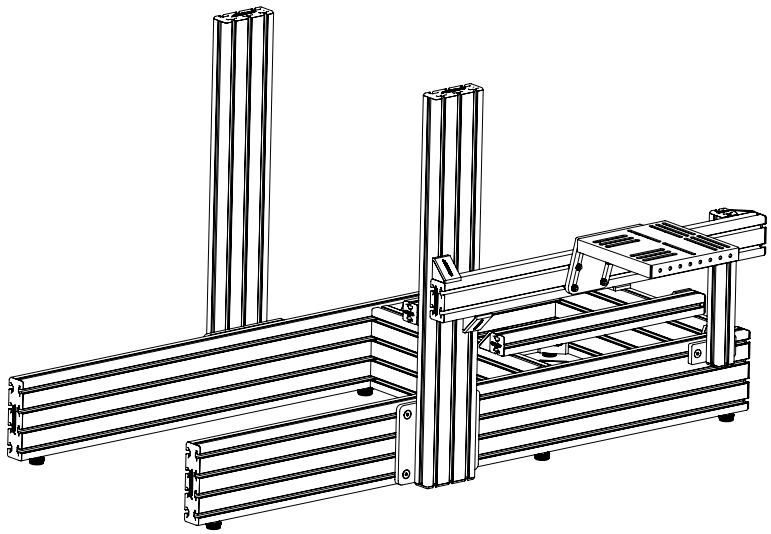

Do not overtighten screws. This may damage components.

SECTION 06

Pedal tray

06

Steps 13 to 14

IN THE BOX

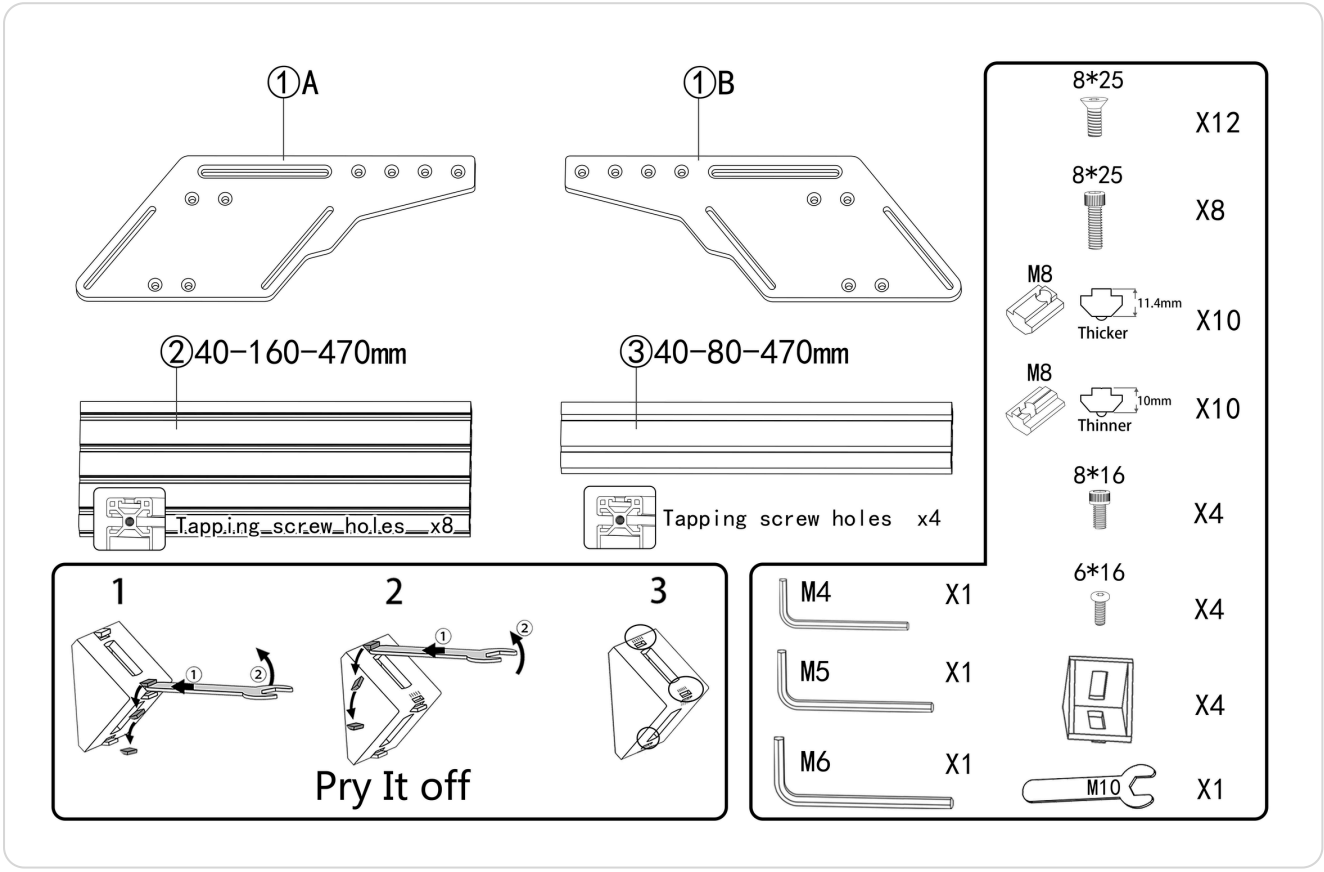

TECHNICAL NOTE

The pedal tray uses both T-nut sizes. Use the thicker M8-1 in the 40-80 profile (3) and the thinner M8-2 in the 40-160 profile (2) and the base frame.

Do not overtighten screws. This may damage components.

Build the version for your pedals. The side plates (1A, 1B) fit in two positions. Follow only the drawing that matches your pedal brand.

STEP 13

FANATEC / SIMAGIC

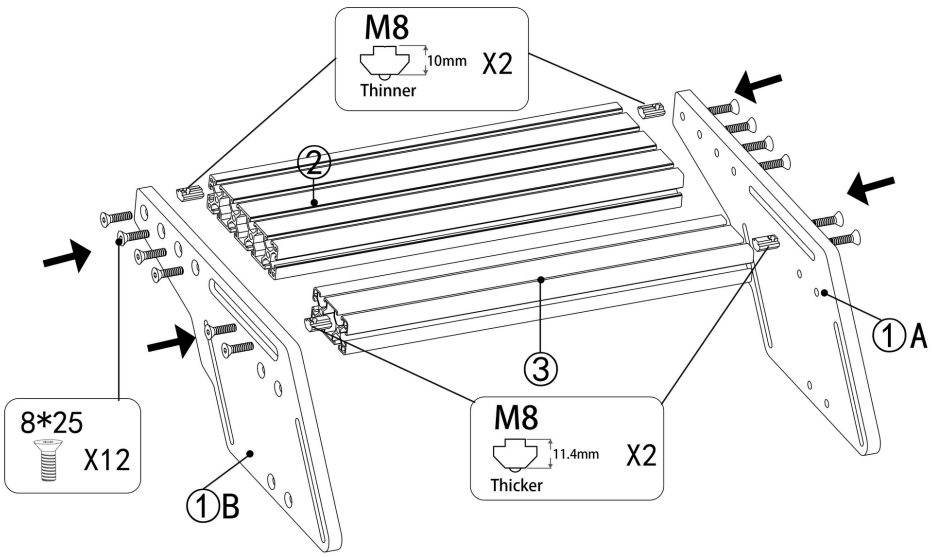

STEP 13

THRUSTMASTER / LOGITECH

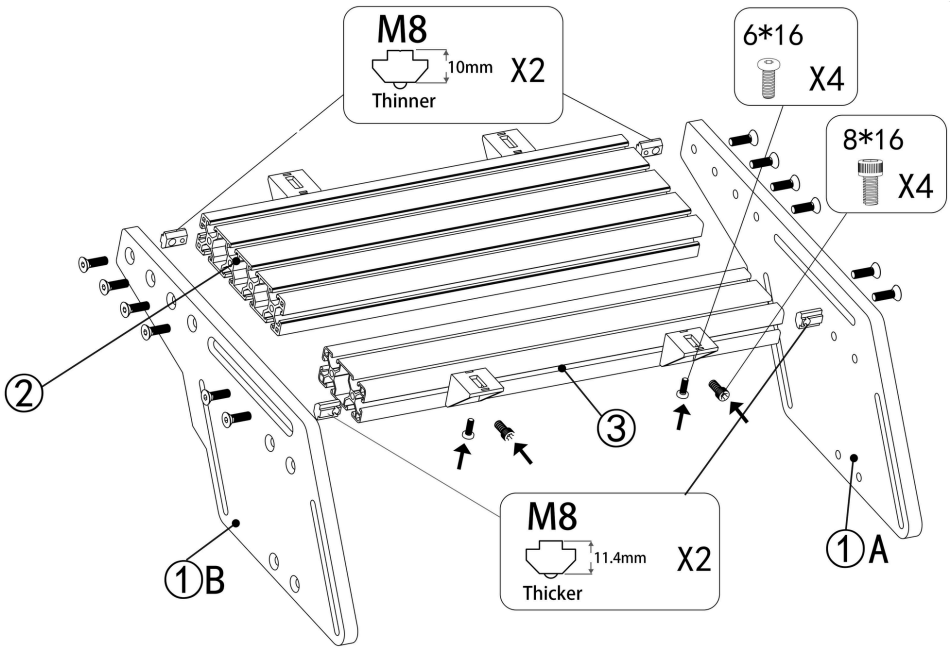

Do not overtighten screws. This may damage components.

STEP **14**

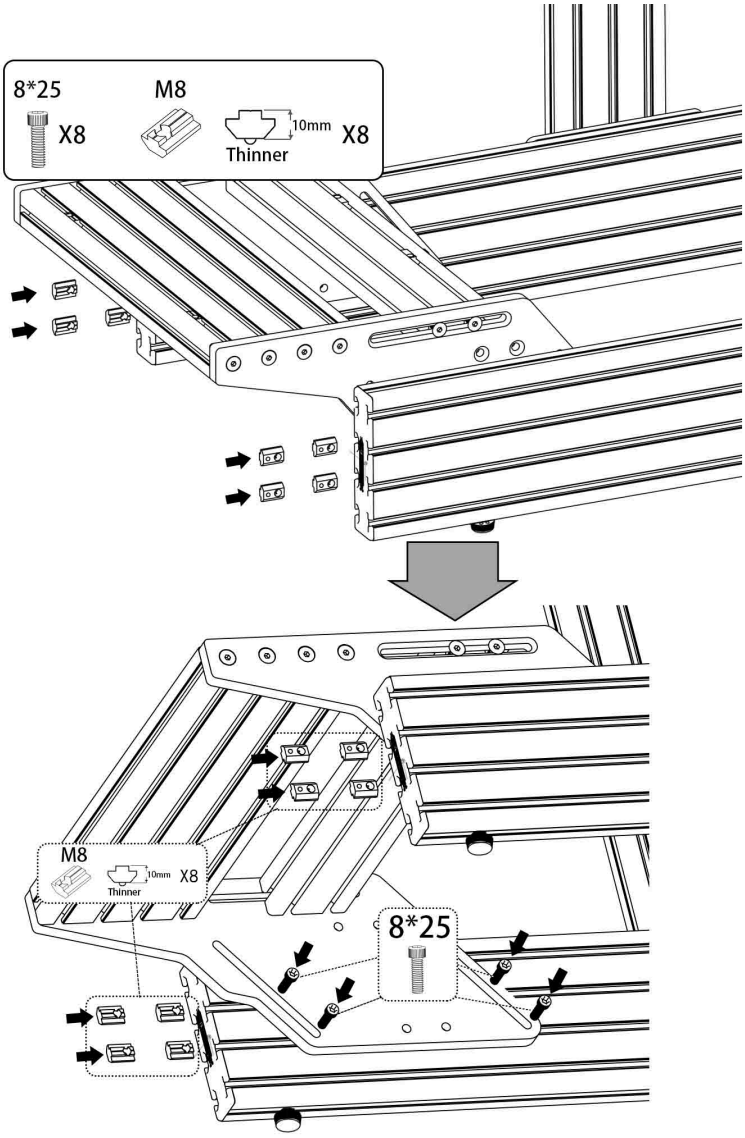

TECHNICAL NOTE

Slide the thinner M8-2 T-nuts into the base frame before fitting the tray. Leave the screws slightly loose until the tray is where you want it.

TIP

The slots in the side plates let you move the pedal tray forward or back later. Loosen the screws, slide it and retighten.

Do not overtighten screws. This may damage components.

SECTION 07

Wheel deck

07

Fit the deck you ordered

Find your wheel deck below and follow only its page. Each deck comes with its own parts and hardware.

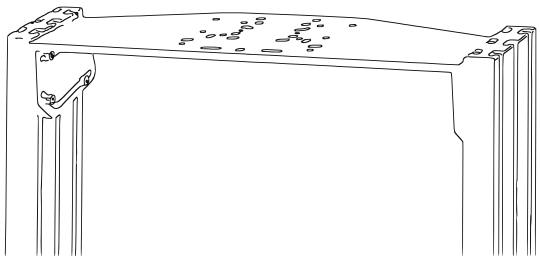

WHEEL DECK

PRIME Wheel Deck

A flat wheel plate across the uprights.

Go to page 19 →

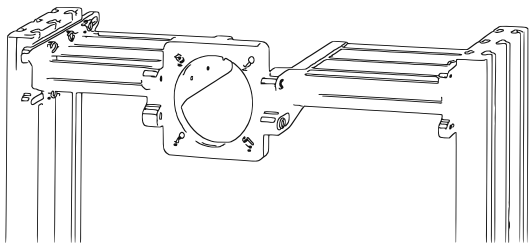

WHEEL DECK

PRIME Sim Wheel Base Bracket

Two profile arms with a round plate for servo wheel bases.

Go to page 20 →

TECHNICAL NOTE

The PRIME Cockpit uprights are 40-120 profiles, so every wheel deck uses the thinner M8-2 T-nuts. Thicker T-nuts in a deck box are for other cockpits and will be spare.

Do not overtighten screws. This may damage components.

WHEEL DECK

PRIME Wheel Deck

Fits the 40-120 uprights of the PRIME Cockpit

IN THE BOX

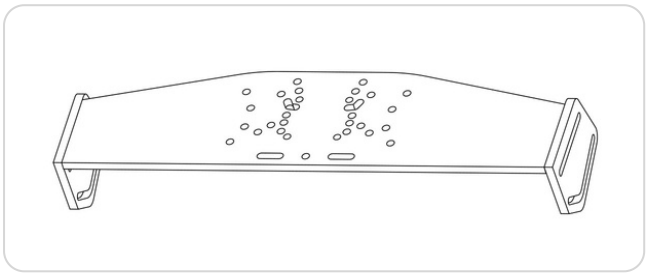

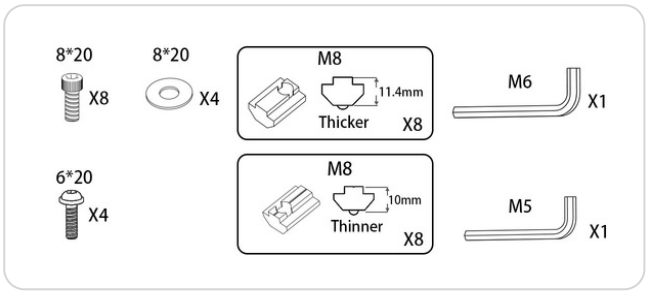

STEP 01

PRIME WHEEL DECK

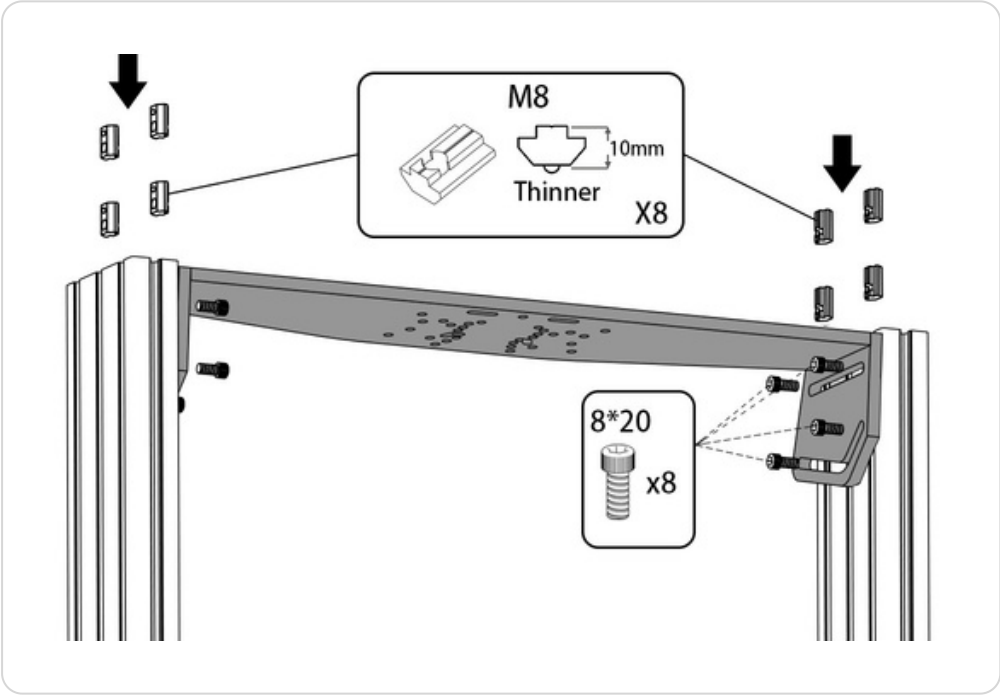

TECHNICAL NOTE

Use the thinner M8-2 T-nuts in the uprights. The thicker M8-1 T-nuts in this box will be spare.

Do not overtighten screws. This may damage components.

WHEEL DECK

PRIME Sim Wheel Base Bracket

Fits the 40-120 uprights of the PRIME Cockpit

IN THE BOX

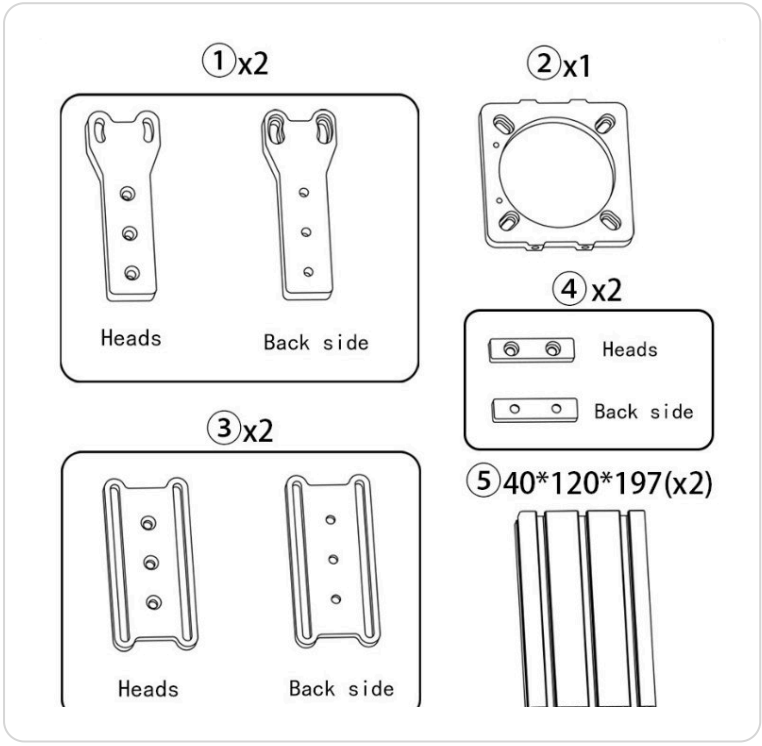

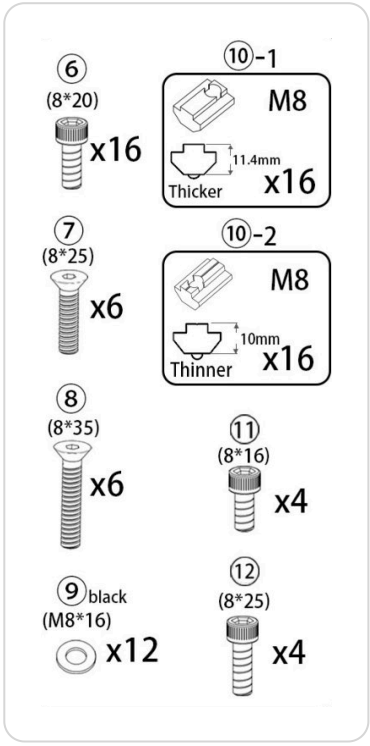

STEP 01

SIM WHEEL BASE BRACKET

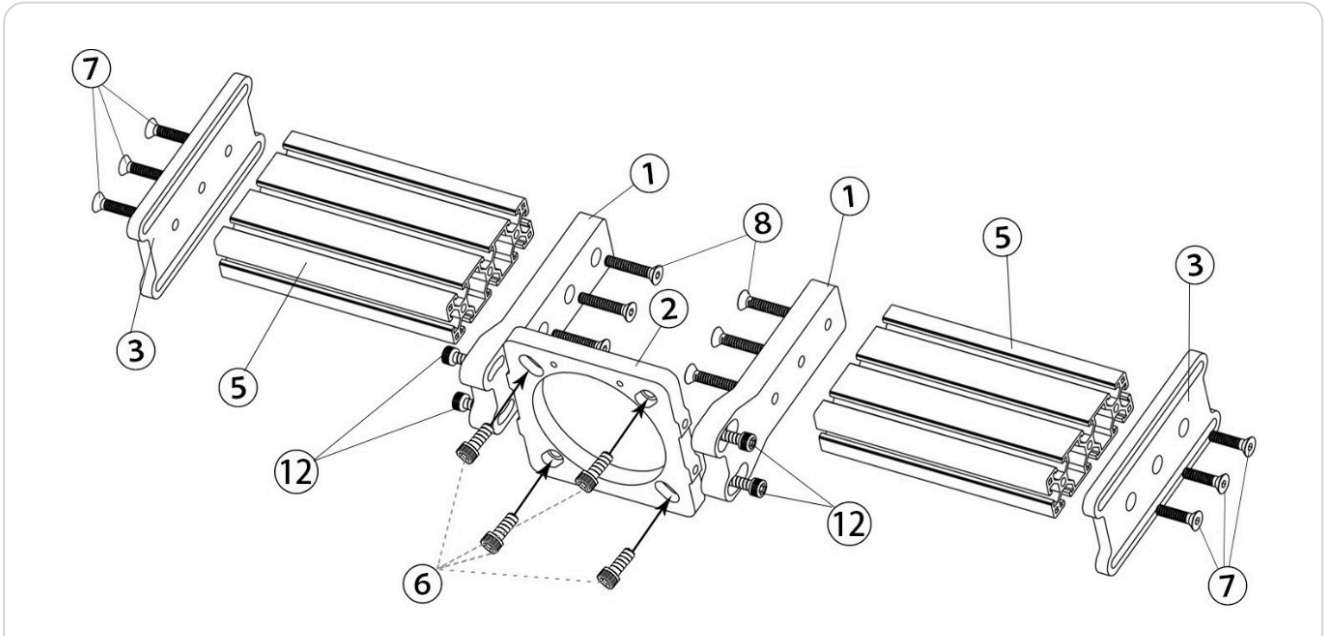

Do not overtighten screws. This may damage components.

STEP **02**

SIM WHEEL BASE BRACKET

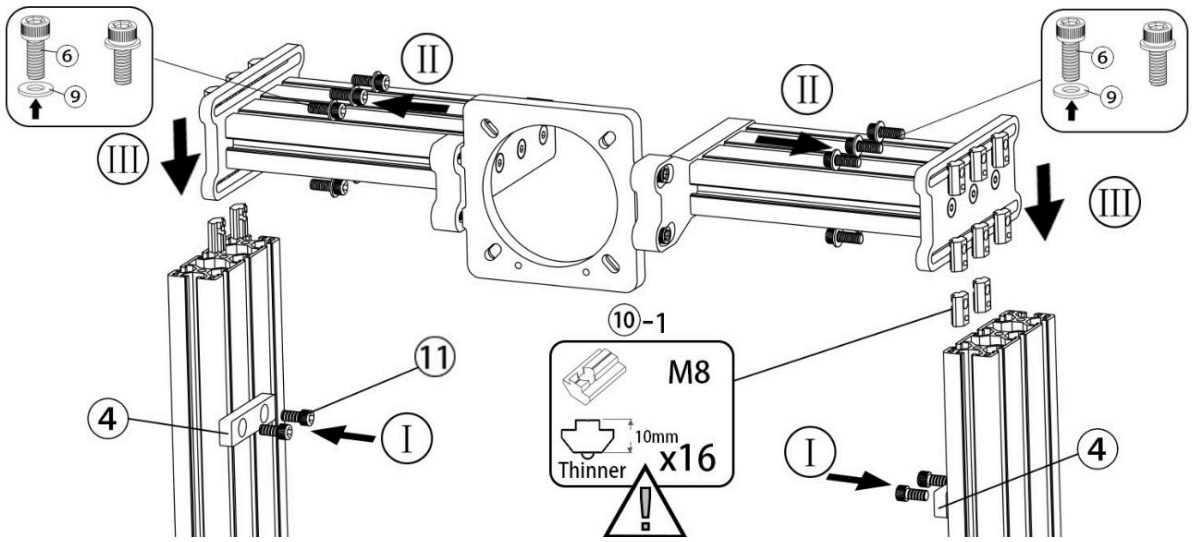

TECHNICAL NOTE

Use the thinner M8-2 T-nuts (10-2) in the uprights. The thicker M8-1 T-nuts (10-1) in this box will be spare.

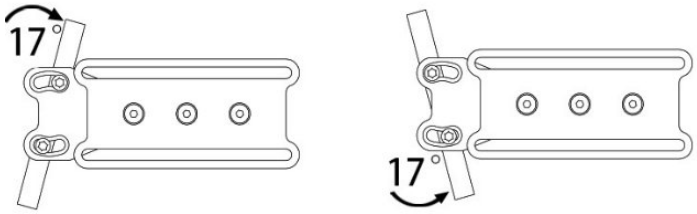

ADJUSTING THE ANGLE

The end plates (3) tilt up to 17° either way. Loosen the screws, set the angle you want and retighten.

BUILD COMPLETE

Your PRIME Cockpit is ready to race.

gtomega.co.uk/help →

Questions about your build? Our support team can help.

Do not overtighten screws. This may damage components.